DESCRIPTION

AVAILABLE FROM MARCH/2024

POWER SUPPLY 220-240 VAC / 50-60 Hz

LED FEATURES

ICONOGRAPHY

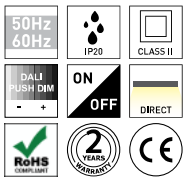

TECHNICAL DRAWING

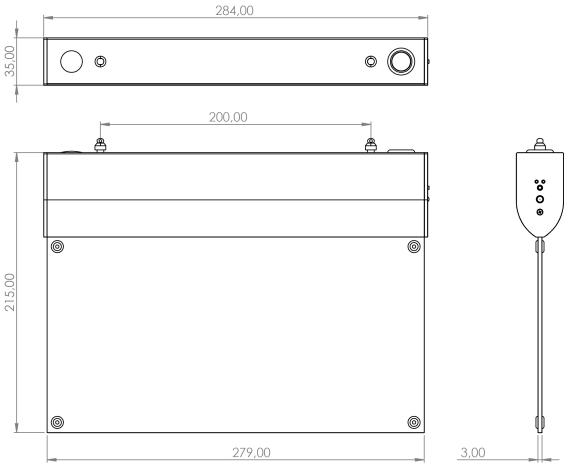

FOLLOW ME MAINTAINED
PRODUCT TABLE AND TECHNICAL SPECIFICATIONS - FOLLOW ME Maintained

ACCESSORIES

	White Fixture FOLLOW-ME	
	White Fixture FOLLOW-ME	6080-120